TABLE 1.—Comparative man hours averages of *Aedes scapularis* mosquitos collected at three localities of the State of São Paulo, Brazil

Months	Cananeia		Casa Grande		Boraceia	
	Indoor	Outdoor	Indoor	Outdoor	Indoor	Outdoor
1960						
November	1,0	5,7	0,3	1,2	..	0,3
December	1,3	6,8	0,4	1,7	..	1,1
1961						
January	1,2	4,3	0,7	2,8	..	1,2
February	1,1	3,2	0,3	2,8	..	1,1
March	1,4	4,0	0,3	2,4	..	0,5
Total	1,2	4,5	0,4	2,2	..	0,9

situated practically inside the jungle and where man plays a small part, there was very little frequency outdoors and none indoors.

Based on these observations, we conclude that *Aedes scapularis* is becoming progressively domesticated. Everything points to this tendency. Therefore, more attention needs to be paid to this species, considering that it is a potential vector of pathogenic organisms to man.

References

KUMM, H. W. and ZÚNIGA, H. 1942. The mosquitoes of El Salvador. Amer. Jour. Trop. Med. 22:399–415.

LANE, J. 1936. Notas sobre culicideos de Matto Grosso. Rev. Museu Paulista 20:173–206.

RACHOU, R. G., LIMA, M. M., FERREIRA NETO, J. A., e MARTINS, C. 1955. Inquérito epidemiológico de filariose bancroftiana em uma localidade de Santa Catarina, como fase preliminar de uma prova profilática. Constatação de transmissão extradomiciliária por uma novo vetor, *Aëdes scapularis*. Rev. Brasil. Mal. e Doenças Trop. 7:51–70.

TRAPS FOR DETERMINING DIRECTION OF FLIGHT OF INSECTS [1]

WILLIAM R. HORSFALL [2]

University of Illinois

Few means are available for determining the direction of movement of populations of insects in flight. Swarms and large insects may be seen and their direction may be traced. Small insects, dispersed populations and nocturnally active insects must be trapped. To this end nets have been rigged and sticky surfaces have been placed in the line of flight. Stationary nets reflect a bias in favor of movements down-wind. The sticky surfaces may create eddies that reflect unpredictable bias. The trap described herein is an active means for obtaining data on direction of movement of flying insects because once an insect is near the open face of a trap, it is sucked into the opening.

A battery of four traps comprises a single trapping unit (Fig. 6). The traps are held in place on a single center pole (Fig. 4) by four braces at the top and

[1] Funds for support of this project were provided by a grant from the National Institutes of Health, Washington, D. C.

[2] Grateful acknowledgment is made to Mr. Stewart Wilson and Roy Charles for aid in design and construction of the traps.

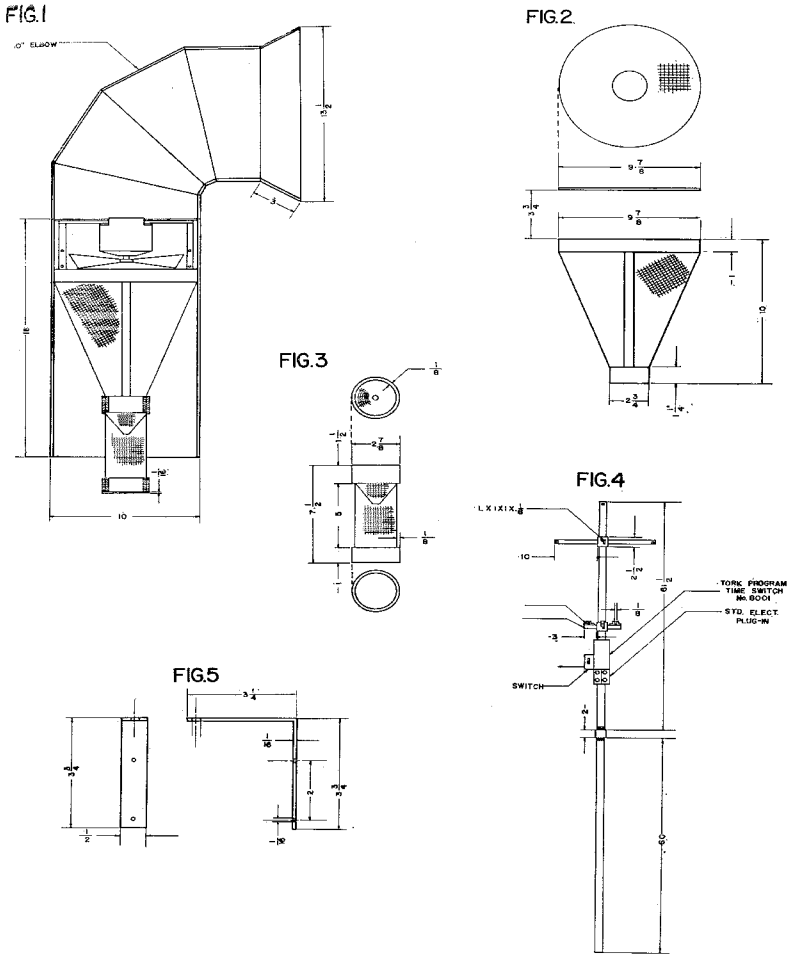

DIRECTIONAL TRAP: DETAILS OF CONSTRUCTION.

FIG. 1.—Cut-away view of trap showing from top to bottom (1) elbowed intake, (2) fan, (3) concentrating cone and (4) collecting cage.

FIG. 2.—Concentrating cone with baffle screen (top and side view) and above.

FIG. 3.—Collecting cage (top, side and bottom view).

FIG. 4.—Supporting pole with timer and switch.

FIG. 5.—Detail of one post for support of fan.

four supports at the bottom of each. Straps between the upper braces keep the traps rigidly fixed. Each trap is essentially a cylinder with an elbow on top so that the intake is a flat face opening perpendicular to the ground. The four traps are so placed that each faces 90° from each adjacent one. In operation one faced toward each of the main points of the compass. The intake of each trap has an area of one square foot.

The trap has a body like the New Jersey trap in that it is a cylinder housing a fan, a concentrating cone and a collecting cage. It is different from the prototype in that it has an elbowed top expanded to an area of one square foot in cross section and has no light for attracting insects.

The body of the trap is a vertical cylinder of galvanized sheet metal 10″ in diameter (Fig. 1). Superimposed on it is a standard 10″ elbow to which has been soldered a cone flared from 10″ to an outside diameter of 13½″. The face of the intake is perpendicular to the ground. The screen concentrating cone is made of copper screen mesh (14 x 18) attached to a sheet-metal sleeve at the top and one at the bottom. The top sleeve fits tightly inside the cylinder at the level of the fan blades. The bottom sleeve provides a friction fit for the collecting cage.

The type of collecting cage may be varied according to its purpose. If live specimens are wanted, a cage of screen with a cone trap in the top is suggested (as illustrated in Fig. 3). Tight containers provided with toxicants may be used as well.

The fan may be of any standard make available at refrigeration or electrical supply stores. The blade should be at least 8″ in diameter. The down-draft created by it while in operation should be sufficient to draw into the trap insects flying within 6″ from the intake.

The traps were operated continuously night and day or were operated at stated intervals by means of a timer. The timer used permitted operation at any interval over 15 minutes for one or several times during the day. For the most part traps were operated from the onset of darkness until midnight. An associated light trap providing separate hourly collections showed that young female *Aedes vexans* were usually on the wing during this interval.

The traps have an active role in collecting passing insects because each is provided with a fan that passes air through it. The area of active suction for an air-borne body like a mosquito is 6″ from the center face of the intake. Insects flying in any direction other than toward a trap will usually pass out of range. To all intents, therefore, insects that are collected are moving in the direction of the intake and at its level although some casual wanderers flying by within the range of the suction will be collected also. The principal value of the fan is to draw into the intake insects like mosquitoes before they are able to veer away after once coming within the range.

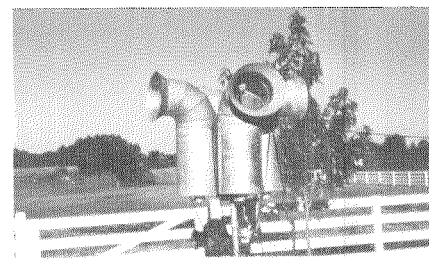

FIG. 6.—A battery of directional traps at a collecting site.

Suction created at the face of the intake was fairly uniform according to records made with a small anemometer of the fan-type. Draft at the center position varied from a low reading of 7.2′ per second to a high of 10.1′ per second. When a wind of 7.1′ per second was blowing from the east no effect was perceptible on the velocity of the air entering the trap regardless of its facing. Three traps directed toward the east at the time showed an intake velocity

t the center that varied from 7.2′ to 8.9′ er second while three others facing west howed intake velocities of 7.7′ to 10.1′ er second.

on a flood plain when mosquitoes were moving from it. The mosquitoes began moving north while they were still visible against the sky. The trap facing south

ABLE 1.—Incidence of young females of *Aedes vexans* caught by a battery of directional traps prior to midnight, Piatt County, Illinois, June-July, 1960

Wind velocity		Number of mosquitoes collected					Direction of approach
	Relative	Ft/sec	North face	South face	East face	West face	
	SW-SE	8.8	2	7	8	2	South & East
loderate	ENE	5.9	12	3	0	6	North & West
	E	4.4	6	7	2	6	Erratic
ow	SW-SE	3.0	2	6	5	12	Erratic
	SW-SE	1.5	11	15	6	28	Erratic
	N	1.5	4	27	7	14	South & West

Mosquitoes enter the traps differentially, s is shown in Table 1. During any one apping interval one trap usually collects e majority of mosquitoes. For example, uring four of the six nights when young males were flying in the area of the ap, one trap collected twice or more than vice as many mosquitoes as any other. ince this group of traps was located on igh ground with sources of mosquitoes all directions, the mosquitoes could approach from all sides. The records indite that they approached without regard velocity or direction of wind during the ght.[3]

The assumption that the traps reflect diction of flight was verified at a location

[3] Velocities and direction of wind were rerded automatically at the collecting site.

caught all of the mosquitoes during the short time the observations were being made.

However, if two adjacent traps collected approximately the same number, the flight was presumed to be from a direction between the two, thus southeasterly or otherwise as the case may be. The tendency toward directional differences was more marked when flights occurred while a moderate wind was blowing.

References

MULHERN, T. D. 1934. A new development in mosquito traps. Proc. N. J. Mosq. Ext. Ass. 21:137–140.

MULHERN, T. D. 1953. Better results with mosquito light traps through standardizing mechanical performance. Mosq. News 13:130–133.

PROVOST, M. W. 1960. The dispersal of *Aedes taeniorhynchus* III. Study methods for migratory exodus. Mosq. News 20:148–161.